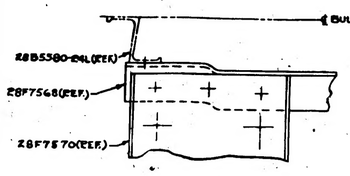

SECTION A-A
SCALE 12"=1'0"

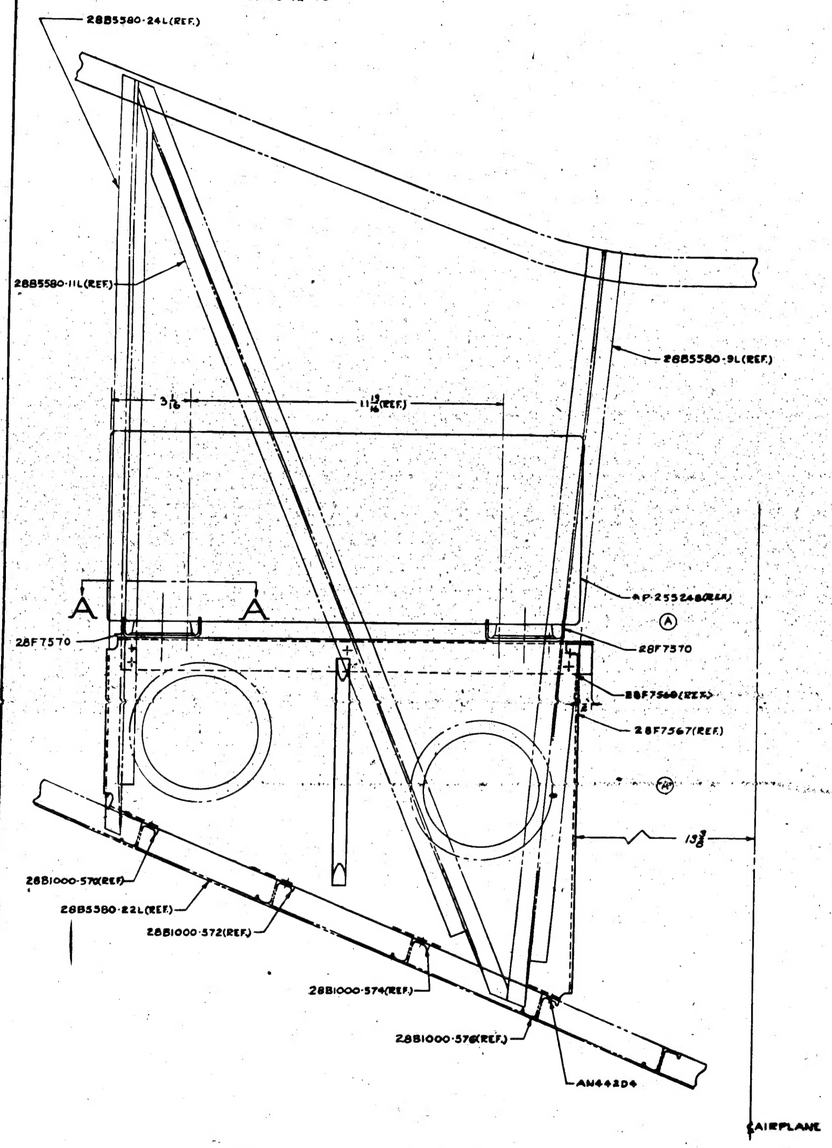

VIEW LOOKING FWD AT BLKD 4
PORT SIDE

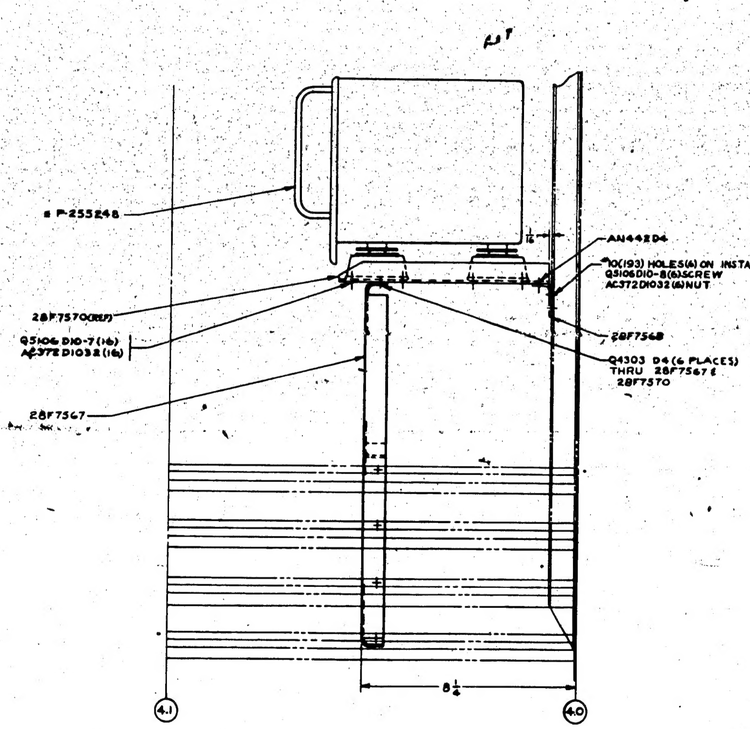

VIEW LOOKING OUTBOARD
FWD →

MKT	ALTERATION	DATE	BY

MKT	ALTERATION	DATE	BY
A	THE HOLE TOLERANCE FOR AN 442D4 NUT, BOLT, SCREW & WASHER AT FITTING 28F7570 & 28F7568 (REF.) IS 0.06 SMALL (0.010 ADD) TO SAME. AN 442 CHGD.		

AN442D4											
Q4303D4											
Q5106D10-8							6				
Q5106D10-7							16				
AC372D1032							22				
* P-255248-TRANSMITTER & RECEIVER-AYD-3											
28F7570							2				
28F7568							1				
28F7567							1				
PART NO.	STOCK	MATERIAL	SPEC.	LH REQ.	RH REQ.	LH REQ.	RH REQ.	LH REQ.	RH REQ.	LH REQ.	RH REQ.
PARTS LIST PER ASSY.				-10		-2		-3		-4	-5

A.G.			
HEAT TREAT	FINISH		
NAME INSTALL-FURNS-TRANSMITTER & RECEIVER ALTIMETER			
CONSOLIDATED AIRCRAFT CORP.		SIZE J	28F7569

PRV. SA	TRP. 100		
MODEL			
REQUIREMENTS PER AIRPLANE			
SCALE 6"=1'0"			

MCR 254-3

* GOV'T FURNISHED EQUIP

APPROVED FOR TOOLING BY
Hourgand
7/26/43

H 418

R 28F7569

H.H. KELLER
7-1-43